HURCO®

VMX50

Power and flexibility for demanding applications.

The VMX50 is a heavy-duty, high-performance machining center with impressive travels. There isn't much it can't handle. The Hurco control and its capabilities give the VMX50 the unmatched ability to increase productivity and efficiency.

The VMX50 is designed for performance. The increased metal removal rates and high rapid feed rates significantly decrease part cycle time. Digital drives promote greater part accuracy and a higher quality finish.

All Hurco VMX models include many standard features that are typically offered as options on most brands of vertical machining centers.

		VMX50		
X, Y, Z Axis Travel, inches (mm)		50 x 26 x 24 (1,270 x 660 x 610)		
Table Size, inches (mm)		59 x 26 (1,500 x 660)		
Max Weight on Table, lbs (Kg)		3,000 (1,360)		1,500 (680)
Peak Spindle Motor, hp (Kw)		24 (18)	29.7 (22.2)	29 (21.6)
Max Spindle Motor Torque, ft lbs (Nm) @ rpm	6.5k	N/A	312 (423) @ 500	N/A
	8k	N/A	260 (353) @ 600	N/A
	10k	210 (285) @ 600	N/A	105 (142) @ 1,450
	12k	175 (237) @ 720	N/A	N/A
	15k	140 (190) @ 900	N/A	N/A
Rapid Traverse X, Y / Z axis, inches (M) / min		1,181 / 787 (30 / 20)		
Tools, Standard / Option		24 / 40 CAT (BT) 40	30 CAT (BT) 50	24 / 40 CAT (BT) 40
Positioning, inches (mm)		±0.0002 (0.005)		
Repeatability, inches (mm)		±0.0001 (0.0025)		
Machine Weight, lbs (Kg)		17,900 (8,120)	20,100 (9,120)	19,200 (8,700)

Optimum machine performance is reliant upon installation conditions at the facility, such as power supply, air supply, and ambient air conditions.

Best in class features

- Huge work cube (50% larger on average than competitive models) lets the operator schedule a wider variety of work.
- Robust conversational and NC programming tools provide the shop with options on how best to approach a particular part.
- Advanced NC interpreter includes powerful software features, such as graphical Data Block Search, which eliminates the tedious task of searching through hundreds of lines of code. Use the rendered graphic of the part and simply point to the spot you need to adjust—the software automatically finds the corresponding line of code.
- Exceptional cutting feed rates of up to 900 ipm with Hurco's UltiMotion feature. Couple that with surface finishing and other process automation software options to get the fastest cut with the best quality.
- Conversational probing aligns the machine to the part, not the other way around—saving valuable time during setup.

800.634.2416 info@hurco.com Find more product information and specifications at **www.hurco.com**

Machines shown with options. Prices and information may change without notice. 8.10

VMX50

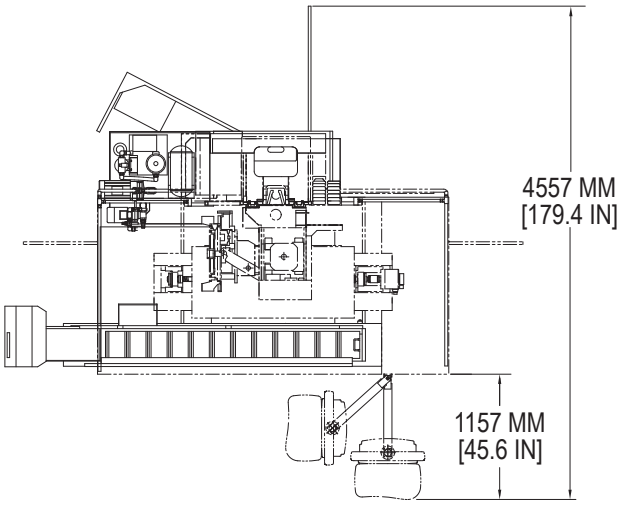

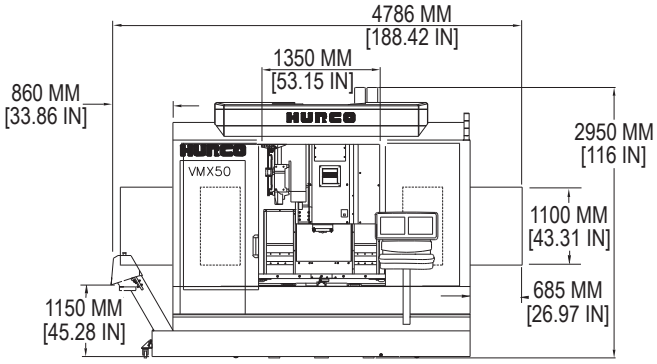

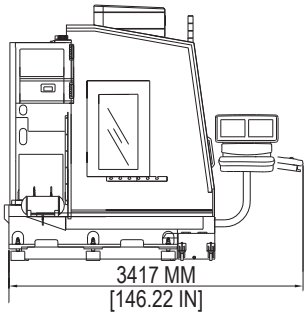

Shipping Dimensions, inches (mm) 127.75" x 89" x 100.59" (3,245 x 2,260 x 2,555)

Service Requirements

Power Required	40 taper: 30 KVA (full load) / 50 taper: 40 KVA (full load)
Voltage Required	200-240 VAC / 50-60 Hz
Air Required	5 CFM @ 80-100 psi (0.14 M^3 / min @ 6-8 bar)

Hardware Features / Options

Coolant / Chip Removal
- Chip Conveyor
- Coolant Screen System
- Flood Coolant
- High Pressure CTS
- Telescopic Way Covers
- Top Dome
- Wash Down Gun and Air Gun
- Wash Down System

Spindle / Motor
- Dual Wound Motor
- High Speed Servo Systems
- Low Air Pressure Switch
- Motor Brake in Z-Axis
- Spindle Chiller

Tooling / Accessories
- Part and Tool Probing
- Rotary Tables
- Tooling and Vises
- Trunnion Tables

Frame / Cabinet
- Air Conditioner
- Door Interlock
- Dual Work Lights
- Easy Access Side Door with Latch
- Fully Contained Tool Storage
- Linear Glass Scales (X, Y, Z)
- Linear Rails
- Lube Oil Separator
- Power Cabinet Heat Exchanger
- Solid One Piece High-Grade Cast Iron Bed

WinMax Software/Automation Packages

- Advanced Verification Graphics with 3D Solid Rendering
- Swept Surface with 3D Mold
- NC/Conversational Merge
- SelectSurface Finish Quality (SFQ)
- Tool Center Point Management
- Tool and Material Library
- 4th Axis Rotary Wrap
- UltiPocket with Helical Ramp Entry
- DXF Transfer
- Tool Probing
- Part Probing
- Industry Standard NC (ISNC)
- NC Productivity Package (NCPP)
- WinMax Desktop
- UltiNet LAN Interface
- Universal Rotary
- UltiMotion
- Slots

800.634.2416 info@hurco.com Find more product information and specifications at **www.hurco.com**

Machines shown with options. Prices and information may change without notice. 8.10