FastGrind

The Economical CNC Grinding Machine

ANCA®

FastGrind The economical CNC grinding machine

The affordable tool grinding package

The ANCA FastGrind is an entry level CNC tool grinder and a popular machine in the ANCA range.

This machine offers all of the benefits that ANCA customers have enjoyed for many years at an extremely affordable price. The FastGrind is a versatile and flexible machine and is suited to a wide variety of industries and applications. It is popular with regrinders and provides opportunities for companies to reduce costs by bringing regrinding in-house. It is also ideally suited to companies looking for reduced risk in making the transition into CNC grinding technology.

The FastGrind has all of the essential elements the industry demands for cost-effective tool grinding, including:

- Quick and easy set-up
- Superior tool accuracy
- High quality surface finish
- Flexibility to grind a large variety of tool types
- Machine reliability and accuracy

Direct-drive technology

The double-ended wheel spindle is based on a direct-drive, bi-directional motor design capable of 10,000 rpm.

With a HSK40F taper, constant power of 3.7 kW (5.0 HP) and peak power of 8.0 kW (10.0 HP), it offers enough power for any resharpening task. There are no belts, pulleys or gears, resulting in superior surface finish on the ground tool and higher machine reliability.

All linear and rotary machine axes, including workhead, use direct-drive technology giving greater positional accuracy.

Flexibility and speed

The FastGrind is both small and compact, yet has a large working envelope making it suitable for a wide range of tool types, geometries and shapes.

The FastGrind also has both the flexibility and speed to tackle a wide range of different high-precision cutting and drilling tools in one set-up. For resharpening, the standard probe system digitises the features and geometry of the tool, ensuring accurate and precise grinding.

FastGrind at a glance

- Double ended HSK wheel spindle
- User friendly and highly advanced software
- The very latest in CNC grinding technology
- ANCA's proven accuracy and reliability
- Resharpening machine with manufacturing capabilities
- Unbeatable price/performance relationship
- Polymer ANCAcrete base
- MPG feed
- Direct-drive technology

FastGrind Machine features and options

Workholding and tool support

The standard FastGrind is configured for use with manual workholding systems. A pneumatic headstock actuator option is available that enables automated workholding solutions to be used and is a mandatory option when used with the FastLoad automated loading system. Other tool support hardware such as steady rest and tailstock are also available.

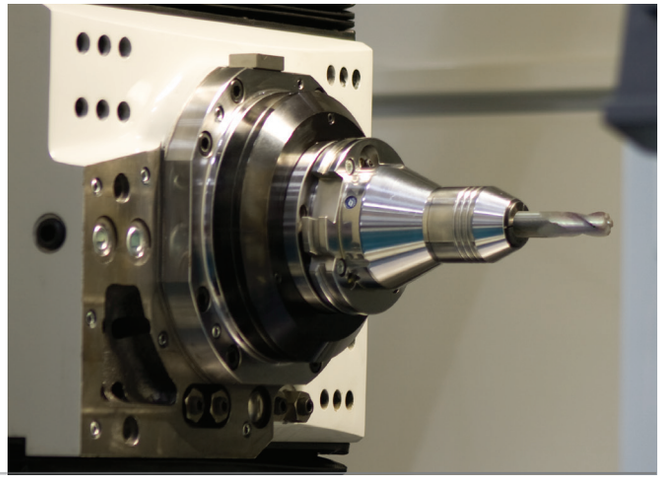

FastLoad Compact Loader

The FastLoad is a unique loading system that is fully contained within the machine canopy. It is designed to be a low-cost solution for customers seeking automation and is perfect for low-volume production runs. The FastLoad can be installed on the FastGrind and GX7 machines.

- Does not increase machine footprint
- Provides low cost automation
- No need to change gripper fingers between batches
- Optimised for highest volume of diameters & lengths
- Designed for collet loading with Nikken KM20 collets that enable different diameter tools in one batch

Technical Data	
Specification	**Length or Time**
Diameter Range	3mm (⅛”) - 20mm (¾”)
Length Range	30mm (1 ¼”) - 150mm (6”)
Maximum Tool Head Diameter	25mm (1”)
Approximate Cycle Time	20 seconds

Tool Pallets	
Tool Diameter	**Pallet Capacity Examples**
3mm (⅛”)	x245
6mm (¼”)	x156
20mm (¾”)	x36

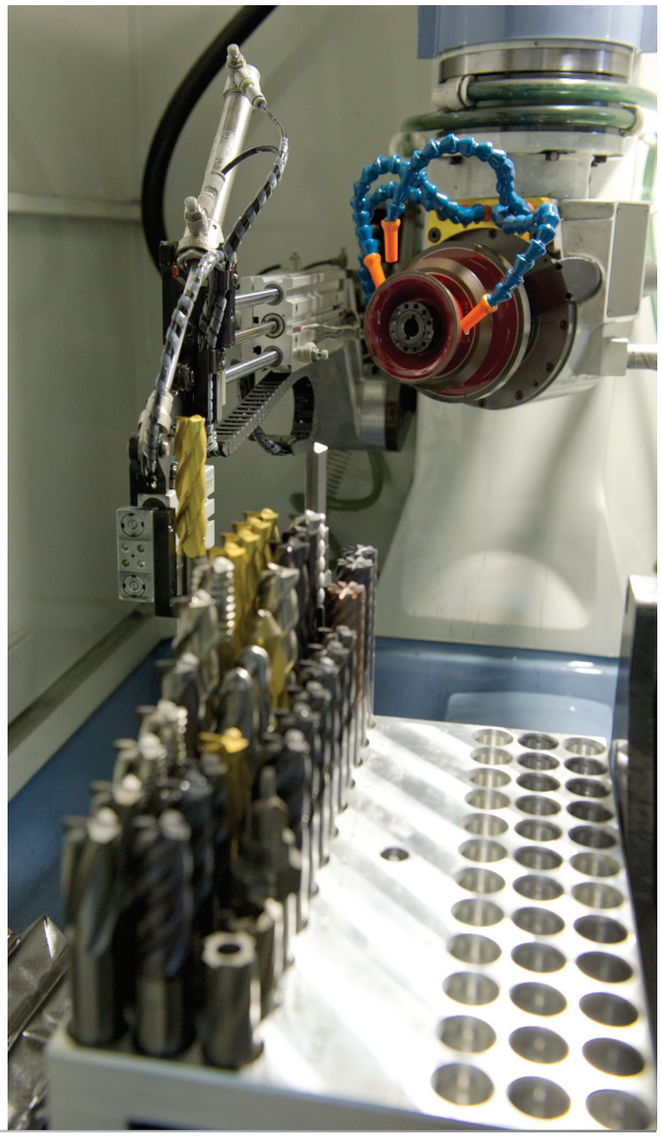

iView

iView is a measuring system that is able to measure the ground tool while it is still in the work-holding on the machine. The image of the ground tool as taken by the iView camera is compared with an ideal overlay shape generated by the software. The tool size can then be compensated automatically based on the overlay.

- Eliminates the need to remove a tool from the grinder in order to check the dimensions
- Reduces errors caused by relocating and manually compensating
- 300x and 100x magnification options
- Provides measuring accuracy to 2 microns
- Includes the capability to be transferred to other ANCA machines

CIMulator3D

CIMulator3D simulates the programmed tool path exactly as it would be ground on the machine. New tool programs can be verified for size, shape, machine clearance and even cycle time estimates. CIMulator3D maintains continuous work flow through the machine by reducing development time and trial grinding.

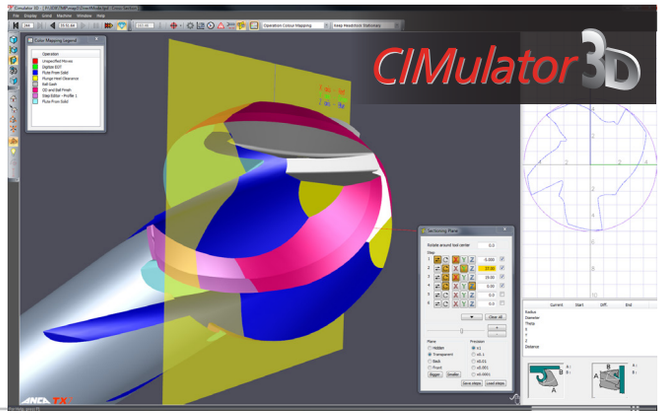

Software

A wide range of applications based on the renowned ANCA iGrind platform is available within the ANCA ToolRoom software suite.

The iGrind interface is user friendly, offering a high degree of flexibility and operational efficiency. ToolRoom supports the grinding of drills, end mills, profile tools, burrs, routers and many other special applications.

ANCA global support

ANCA's FastGrind is the CNC tool and cutter grinder chosen by resharpening shops where high precision tools and reliability are paramount.

It is designed to meet the demands of a competitive industry, and is supported by ANCA's world-wide team of technical specialists. Confidence that ANCA is the right choice goes beyond the machine. The ANCA team will be your partner with application and machine support from training right through to maintenance.

Aftermarket Services

- Comprehensive global network of service centres
- Preventative maintenance
- Service contracts/maintenance agreements
- Replacement parts
- Technical queries & application support
- Training
- Software & hardware upgrade programs

FastGrind Technical specifications

CNC-Data
ANCA 5DX, Core 2 Duo, min. 3GB RAM, 15” Screen

Mechanical axes
Position feedback resolution

X, Y & Z-axis	0.0001 mm (0.0000039”)
C & A-axis	0.0001 deg

Programming resolution

X, Y & Z-axis	0.001 mm (0.000039”)
C & A-axis	0.001 deg

Travel

X-axis	435 mm (17.1”)
Y-axis	457 mm (18”)
Z-axis	275 mm (10.8”)
C-axis	320 deg
A-axis	360 deg

Software axes (patented)
B, V, U, W,

Work piece

Maximum tool diam.	Ø220 mm (8.66”)
Maximum tool weight	20 kg (44 lbs)

Drive system
ANCA Digital (SERCOS standard) / Linear axes direct-drive ballscrew / Rotary axes direct drive

Machine data

Grinding spindle	Bi-directional direct drive 3.7kW/5HP (S1) 8kW/10HP (peak) 10,000 RPM HSK40F taper
Grinding wheel	Max Ø202mm (8”)
Wheel bore	Ø31.75 mm (1 ¼”), 32mm and 20mm
Two wheel packs	Max 4 wheels each

Other data

Electrical power	15KVA (including coolant system)
Probe system	Renishaw
Coolant system	External
Machine base	ANCAcrete (Polymer concrete)
Colour	RAL 7035 / RAL 5014
Weight	Approximately 4500 kg
Floor plan	Width: 2075 mm (82”) Depth: 1450 mm (57”) Height: 1990 mm (78”)

ANCA reserves the right to alter or amend specifications without prior notice

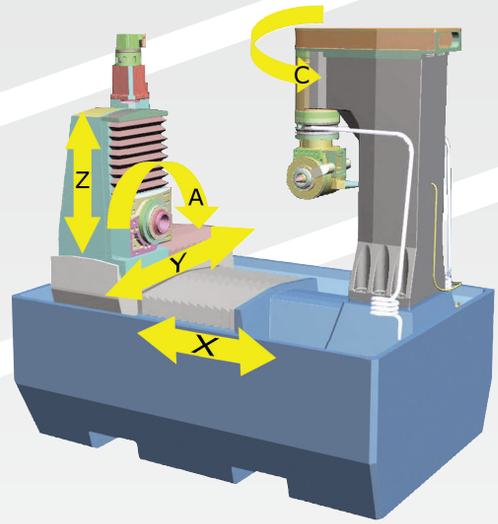

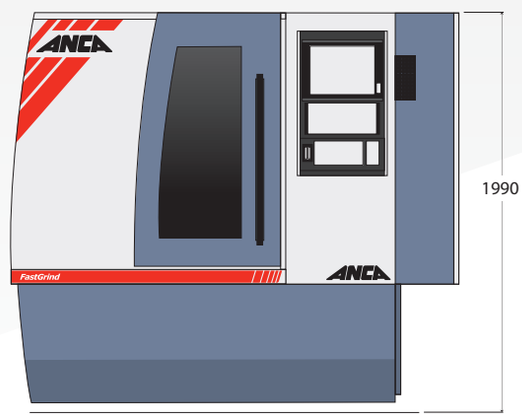

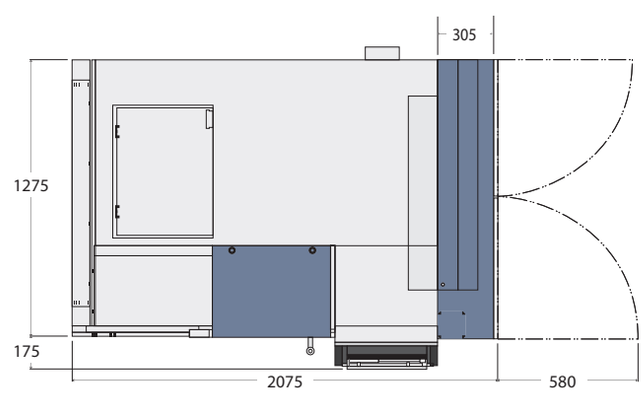

AUSTRALIA
ANCA Pty. Ltd.
25 Gatwick Road
Bayswater North
Victoria 3153
AUSTRALIA
Tel +61 3 9751 8200
ozinfo@anca.com

USA
ANCA Inc.
31129 Century Drive
Wixom
Michigan 48393
USA
Tel +1 248 926 4466
usainfo@anca.com

UNITED KINGDOM
ANCA Ltd.
2 Eastwood Business Village
Harry Weston Road
Coventry CV3 2UB
UNITED KINGDOM
Tel +44 2476 44 7000
ukinfo@anca.com

JAPAN
ANCA Japan
3-60-1 Sakuragaoka-cho
Owariasahi-shi
Aichi-Ken 488-0859
JAPAN
Tel +81 561 53 8543
japinfo@anca.com

CHINA
ANCA Machine Tool (Shanghai) Co. Ltd
West Wing, 1/F., Building 4,
475 Fu Te No.1 Road(W)
Waigaoqiao FTZ, Shanghai,
CHINA
Tel +86 21 5868 2940
chinfo@anca.com

BRAZIL
ANCA do Brasil
Rua Francisco Ferreira Leão 377
Sorocaba 18040 330
São Paulo
BRAZIL
Tel +55 15 3221 5512
brinfo@anca.com

ITALY
ANCA Italia
Via Retrone, 39
36077 Altavilla Vicentina (VI)
ITALY
Tel +39 0444 341 642
itinfo@anca.com

GERMANY
ANCA GmbH
Alois-Senefelder-Str. 4
68167 Mannheim
GERMANY
Tel +49 621 338100
gerinfo@anca.com

INDIA
ANCA India
ANCA Machine Tools Private Ltd
64, Parimala Towers
MES Rd
Yeshwanthpur
Bangalore 560 022
INDIA
Tel +91 80 4219 8107/108
indiainfo@anca.com

THAILAND
ANCA (Thailand) Ltd
Eastern Seaboard Industrial Estate,
No. 109/20 Moo 4,
Tambon Pluakdaeng,
Amphur Pluakdaeng,
Rayong 21140
THAILAND
Tel (+66) 03895 9252
thainfo@anca.com

ANCA®

www.anca.com

Aug2013/English