Kingred

專業高精密電加工設備制造商

A professional maker of high precision EDM machines

蘇州工業園區凱德機電科技有限公司

Suzhou Kingred Electrical and Mechanical Technology

地址：蘇州市相城區太平工業園聚金路888號

ADD: NO.888.Jujin Road.Xiangcheng, Suzhou city, China

Tel: +86（0）512—62923695 66730809

Fax: +86（0）512—62923693

www.kingred.cn; E-mail: kd@kingred.cn;

www.kingedms.com; E-mail: info@kingedms.com

Hot line: 400-0990619

服務熱線：400-0990619

- 直綫馬達全閉環中走絲綫切割
  LINEAR MOTOR CLOSED-LOOP CNC WIRE CUT EDM
- 伺服馬達半閉環中走絲綫切割
  SERVO MOTOR CNC WIRE CUT EDM
- 步進馬達開環中走絲綫切割
  STEPPER MOTOR CNC WIRE CUT EDM
- 經濟型數控綫切割機床
  CONVENTIONAL ECONOMICAL CNC WIRE CUT EDM
- 電火花細孔放電加工機
  SMALL HOLE EDM

精密制造
用心打造一流

PRECISION
MANUFACTURING
CONCENTRATION

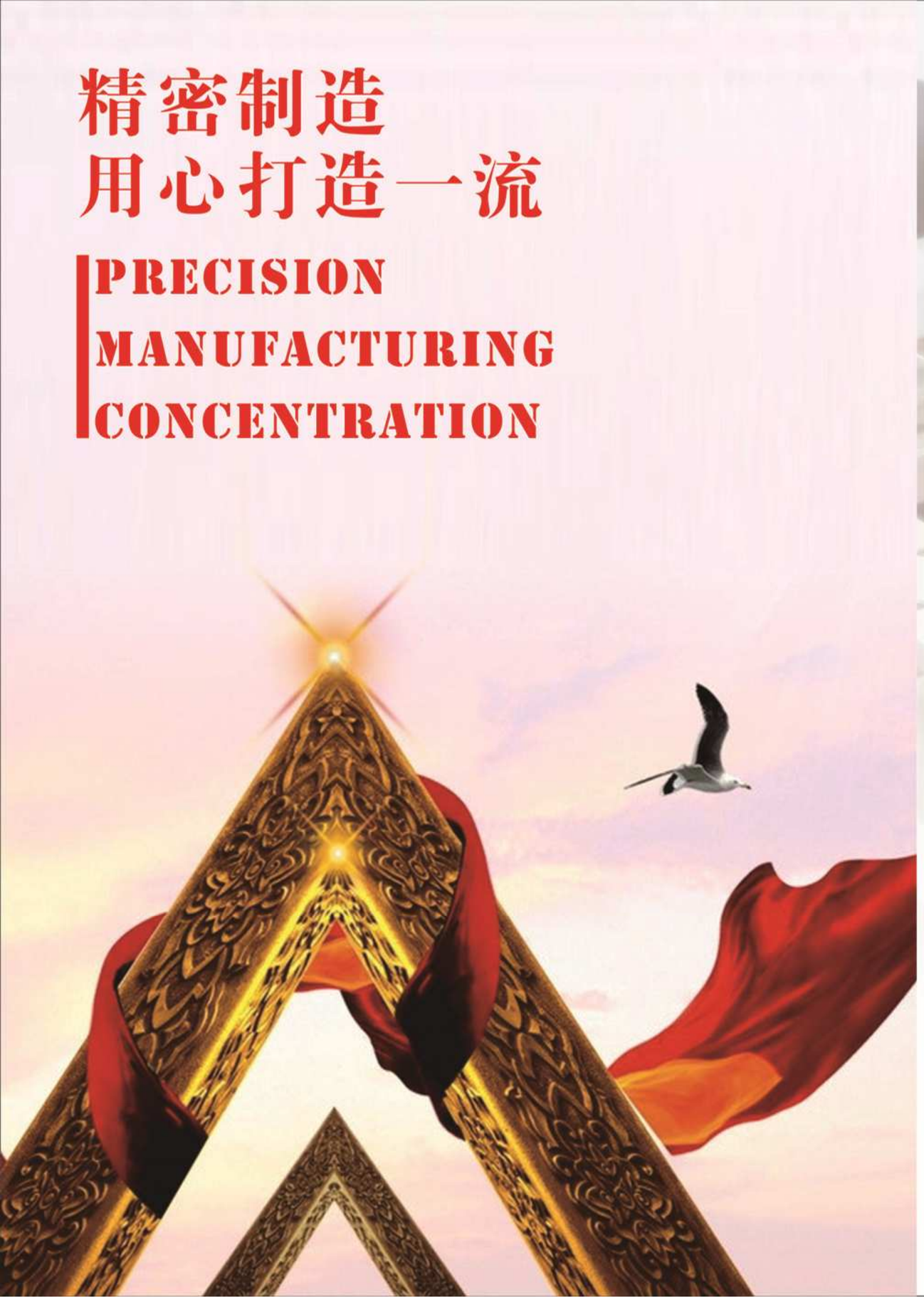

優秀品質 Excellent　勇于創新 Innovative　值得信賴 Trustable

公司簡介 BRIEF INTRODUCTION

蘇州工業園區凱德機電科技有限公司坐落于風景優美的陽澄湖畔蘇州市相城區太平工業園。是一家集研發，生產，銷售高精密電火花加工機爲一體的專業廠家。公司緊鄰滬寧高速蘇杭高速，312國道和227省道，京滬高鐵蘇州北站5分鐘車程，交通十分便利。

公司以精湛的技術和優質的客服服務，配合全套先進的的測試設備以及資深的行業專家和工程師精益求精的創新的精神。面對我國日益激烈的市場環境，公司技術人員不斷創新完善現有產品，使得品質日益提高，并遠銷美國、德國、澳大利亞、俄羅斯、印度、墨西哥、厄瓜多爾、摩洛哥、土耳其、烏克蘭、秘魯、哈薩克斯坦等海外市場，廣受客户好評！

公司現有高級工程師，技術人員多名，并聘請數名行業資深專家爲顧問，結合目前國際先進的技術和理念，不斷的進行產品研發及創新，致凱德成爲引領行業的標杆型企業！（現擁有兩項發明專利六項實用新型專利，兩項外觀專利）。

公司以先進的經營理念，誠實守信的服務宗旨以質量樹品牌，以發展增效益，專注做好每一細節認真做好每一件事，爲客户提供最優質的產品和服務。公司秉承“誠信”的服務宗旨，堅持“規範”的企業思想，真誠與各界朋友合作，携手并進。

Suzhou Kingred Electrical and Mechanical Technology Co.,Ltd is located in Taiping Industrial Park, Xiangcheng district, Suzhou, near beautiful Yangcheng lake. Kingred is focused on developing manufacturing and selling EDM(electrical discharging machine), which includes CNC wire cut EDM, small hole EDM and sinker EDM. Kingred is near G312 national road and S227 province road, and 5 minutes away from Suzhou North Railway Station, it's pretty to convenient to access Kingred

Thanks to passion of innovation, experienced skills and swift after−sale service, combining with advanced equipment, Kingred had developed many new products with leading technology and ideas which makes Kingred stand at the front of industry of EDMs in China. Kingred gained reput− ation increasingly from both domestic and international market, and products had been widely sold to USA Germany, Australia, Russia, India, Mexico, Ecuador, Turkey, Peru and so on.

Kingred has numbers of senior engineers and technicians, and hired reputed experts of EDM industry as consultants; all our staffs are embracing new technology with strict self−discipline from time to time, to enhance themselves in building more advanced and more reliable EDM imachi− nes, our motto is: quality makes credit, management creates excellence, innovation guarantees lead.

直綫馬達全閉環中走絲綫切割
LINEAR MOTOR CLOSED-LOOP CNC WIRE CUT EDM

優秀品質 Excellent　勇于創新 Innovative　值得信賴 Trustable

❶ 全新鈑金設計
All new designed sheet metal

一體化的板金設計（專利設計），外觀更高檔大氣提升企業形象，有效節約您的空間，操作使用更方便。優化的電路設計，大幅減少故障率。

Integrated designed sheet metal(invention patent), good appearance, save space and easy to operate. Optimized wiring of electrical circuit to reduce malfunction rate.

❷ 專利運絲結構設計機床,切割更平穩
Patented wire feed system, which makes cutting more smoothly

專利設計的運絲機構（發明專利），絲筒固定安裝，絲筒電機分離，根本上解決了絲筒左右運動與電機震動引起的鉬絲的抖動，全新的排絲與自動緊絲機構避免了鉬絲單邊鬆絲的產生，大幅減少的運絲距離，有效減少了鉬絲的運行震動與鉬絲高速運動的拋絲現象。機床切割更平穩，切割效率，精度，表面粗糙度質的提高。

Patented wire feed structure (invention patent), wire drum is fixed with separated wire drum motor, and this design solves the problem of vibration of wire due to shake of wire drum motor, and wire drum just rotates and doesn't move in longitudinal direction. All new wiring and tension control system reduces distance of wire feeding, wire throwing problem during high speed feeding. The patented wire feed system makes cutting more smoothly to get much better accuracy and surface finish with fast cutting speed.

❸ UV 立式結構
Vertical structure of U&V axes

U V采用立式結構（發明專利），全直綫導軌，滚珠絲杆驅動電機采用直接式驅動比傳統錐齒輪橋接方式更穩定，全手控盒控制，Z軸自動升降實現貼面加工，高强度，高精度。

We adopt vertical structure of angle cutting system(invention patent), all of linear guideway and ball screws driven by direct connection. Hand control box to-control U and V axis, up and down feed of Z axis to realize facing machining to-get better rigidity and accuracy.

❹ 環保設計,節省資源
Environmental design, resource saved.

床身四周集油槽設計，讓您的機床各種液體集中收集，不會污染機床周圍環境，便于清理機床更環保。

There are oil grooves all around machine, all kind liquids are collected together of their kinds.It won't pollute environment of machine, and easy to clean.

❺ 拖板結構剛性更佳
Cross shape carriages with excellent rigidity

十字型托板結構，剛性强T型結構床身，X,Y軸達最大行程時不會偏離拖板與床身，避免了因工作臺的失衡而造成的精度吾儕，提高加工件的精度。

"+" shape carriages design, "T" shape machine bed X and Y axes are always in the range of machine bed of their all travel, no effect of gravity of carriages, which avoids imbalance of working table and increase cut accuracy.

發格光柵尺
FAGOR linear scale

凱德直綫電機
Kingred's linear motor

直綫馬達全閉環中走絲綫切割
LINEAR MOTOR CLOSED-LOOP CNC WIRE CUT EDM

優秀品質 Excellent　勇于創新 Innovative　值得信賴 Trustable

特色說明：
Features:

- 新型綫馬搭載光學尺做全閉回路位置控制，性能先進化，AU系列搭載凱德全自制綫性馬達棒型綫馬，最佳控制解析度1μm。
- 非接觸性轉動模式，在上時間下高效穩定加工。
- 高靈敏的伺服反應速度使放電間隙控制更佳穩定，同時提升加工速度8~15%。低摩擦阻抗帶來高效率及高重復精度，無背隙補償問題，低磨耗同時擁有高壽面壽命。

- Latest linear motor combines with linear scale to realize fully closed-loop control, advanced performance, precise control, bar type linear motor with control resolution 1μm.
- Non-touched type transmission, high cutting speed with good stability.
- High sensitive servo control to make sure gap control of electrical discharging much more stable, and increase cutting speed 8-15%. Super low resistance brings high efficiency and repeat accuracy, no gap compensation of screw, low wear, and longer use-life.

提升生產效率
Increase efficiency

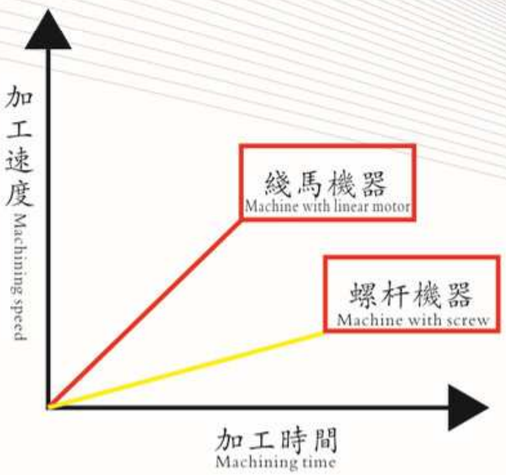

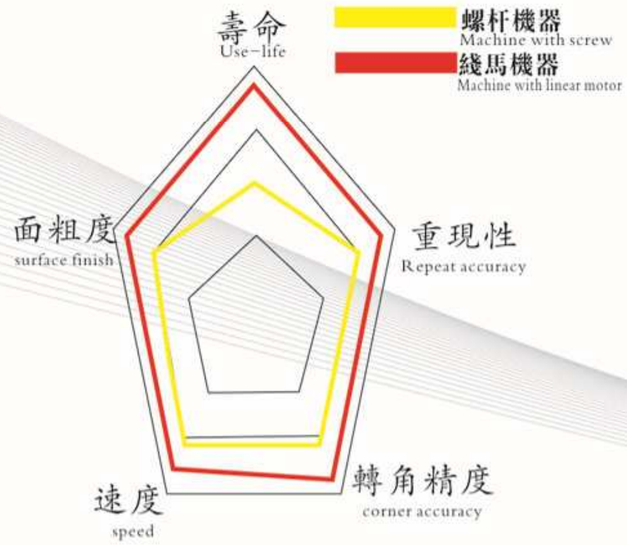

凱德綫馬結構特色：
Characteristics of Kingred's linear motor

- 螺杆會因磨耗而產生接觸轉動，綫性馬達則不會產生背隙。
- 而綫性馬達采用無接觸轉動，免去使用螺杆而產生摩擦的問題。
- 綫性馬達采用閉回路，直接在光學尺的節讀頭，就是動子的位置。
- XY軸同動匹配提升，連真圓度<2.5μm。
- 減少背隙誤差與反向尖點問題。

- Wear of screw will lead to gap error of transmission, no gap error of linear motor.
- Linear motor is non-touched transmission, no friction problem.
- Linear motor adopts closed-loop control, direct feedback from mover of linear motor. Excellent accuracy performance.
- Synchronism of XY axes increased obviously, continuous roundness< 2.5μm.
- Reduce gap error and reverse sharp point problem.

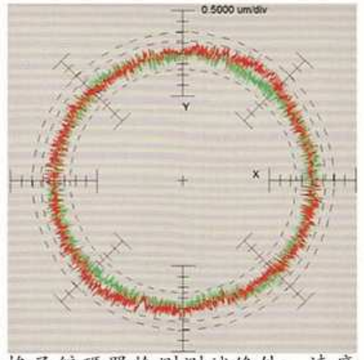

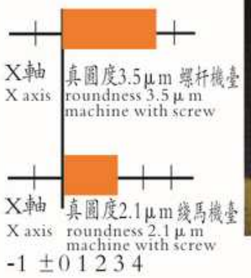

格子編碼器檢測測試條件：速度5mm/min半徑1.00mm

螺杆機器刃口轉角
corner performance of screw machine

綫馬機器刃口轉角
corner performance of linear motor machine

綫性轉角大躍進：Good corner accuracy performance

螺杆因伺服轉向或同動磨耗而產生插滯間隙誤差，在圓弧轉角的表現容易造成崩角與過度放電現象,而綫性馬達采用無接觸傳動則不產生背隙因高伺服反應，在相同位置的表現可達高精度。

Direction change of servo motor and synchronization wear will cause gap error of screw, especially sparking at corner, over-sparking and collapse happens, but for machine with linear motor, as its non-touched transmission, there is no problem of gap due to servo action, accuracy of corner is much better.

綫馬的優點：
Advantage of linear motor:

- 不需要轉動原件因此慣量小，加速度高，故障率低，可靠度高。
- 行程無上限。
- 磨耗極小，可保持系統精度及使用壽命。
- 因以氣隙的非接觸直接轉動，所以可得到無摩擦的直接運動推力，使得直接轉動效率高，噪音低。
- 精密機達到1nm的定位，高速機達到每分超過100m的高速。

- No transmission components, small inertia, low malfunction ratio, high reliability.
- No limit of travel.
- Small wear, great performance of precision keeping and use-life.
- Non-touched transmission to get no friction drive, fast feed speed with very less noise.

伺服馬達半閉環中走絲綫切割
SERVO MOTOR CNC WIRE CUT EDM

優秀品質 Excellent　勇于創新 Innovative　值得信賴 Trustable

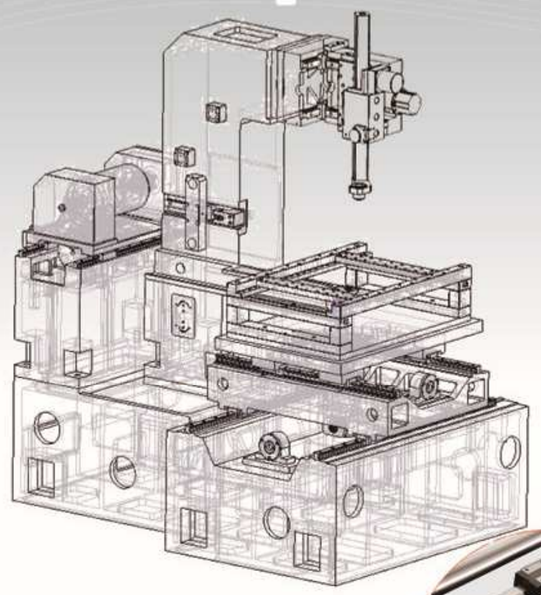

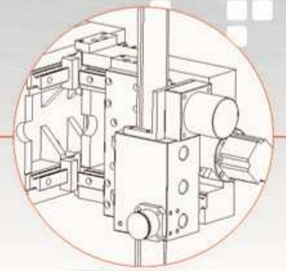

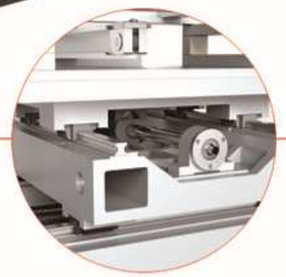

❶直綫導軌精度更高
Linear guide with better accuracy

全新的組合夾具的臺面設計,適合各類精密工件的裝夾。X,Y軸和運絲均采用精密級滚珠絲杠和臺灣進口直綫軌較普通V型導軌精度更高并設置了自動供油裝置，壽命更長。

Brass wire EDM type working table with special clamping system, suitable for various clamping of workpieces, X and Y axis with P2 grade double nuts ball screw and high precision Taiwan made linear guideway. Automatic lubrication makes sure long use life of screw and guideway.

❷UV 立式結構
Vertical structure of U&V axes

UV采用立式結構（發明專利），全直綫導軌，滚珠絲杆驅動電機采用直接式驅動比傳統錐齒輪橋接方式更穩定，全手控盒控制，Z軸自動升降實現貼面加工，高强度，高精度。

We adopt vertical structure of angle cutting system(invention patent), all of linear guideway and ball screws driven by direct connection. Hand control box to control U and V axis, up and down feed of Z axis to realize facing machining to get better rigidity and accuracy.

❸低速高扭電機控制方便操作
Motorized Z axis

Z軸采用低速高扭矩電機控制，可實現自升降，操作更簡單便捷。

Z axis is driven by low speed high torque motor, it's easy to control up and down movement of Z axis.

❹獨特走絲結構，避免跳絲
Unique wire feed system, less jumpiness of wire

全獨特的恒張力走絲結構，避免鋼絲在正反向轉換時產生的跳動及單邊拉絲現象，并保持鋼絲的恒張力，確保較高的加工精度。

New designed wire tension control system to avoid jumpiness of single size wire pulling phenomenon, and keep constant tension of wire, to improve cutting accuracy.

❺拖板結構剛性更佳
Cross shape carriages with excellent rigidity

十字型托板結構，剛性强，T型結構床身，X,Y軸達最大行程時不會偏離拖板與床身，避免了因工作臺的失衡而造成的精度吾儕，提高加工件的精度。

"+" shape carriages design, "T" shape machine bed, X and Y axes are always in the range of machine bed of their all travel, no effect of gravity of carriages, which avoids imbalance of working table and increase cut accuracy.

❻T型全支撑設計,精度恒久不變
Brass wire design bed, long time accuracy keeping

床身，托板采用慢走絲結構設計，剛性好，强度高鑄件采用樹脂砂制造技術，確保承載能力和機械精度的恒久不變。

We adopt brass wire EDM type machine bed and use resin sand casting,to make sure good rigiditywith full load and long time precision keeping.

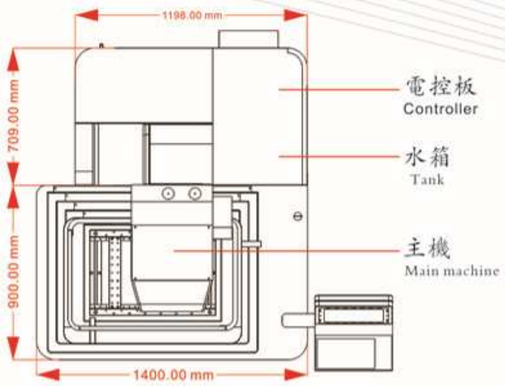

機床平面布置圖
Layout of machine

KDXP控制系統
CONTROLLER SYSTEM

KDXP中速走絲電火花數控綫切割機控制系統選用高性能，穩定可靠地計算機爲主機系統，實現了模塊化設計，國產步進（選配進口交流伺服驅動器）及電源功效，高頻電源的完美結合使得整個控制系統達到充分的先進性和可靠性。

We adopt high performance, reliable industrial computer as platform for KDXP medium speed CNC wire cut EDM, modularized design, coordinates with national made stepper (optional imported AC servo drive) and high efficient HF power , to realize advance and reliability of whole control system perfectly.

WINDOWS XP操作系統實現與多種設計軟件無縫對接；
15寸工業液晶顯示，人機操作界面簡單，直觀；
中文，英文菜單任意設置；
大容量儲存器，豐富的加工工藝條件庫；
高性能CPU協同控制，功能豐富；
磁盤，鍵盤接口和串行通訊接口與外界交換數據；
文件的編輯，復制，查找，替換等處理功能；
X,Y,U,V四軸數控，X,Y,U,V四軸聯動；
實現上下异形面，變體及清角等多種功能；
實現一次切割或者多數切割；
電機絲運行速度由數控系統設定控制；
電機絲張力采用變向自動緊絲功能；

WINDOWS XP operating system supports kinds of CAD software;
15 inch industrial monitor, friendly man-machine interface, simple and visual;
Chinese, English manual;
Massive storage for machining files keeping;
High performance CPU;
USB, serial port and internet access for communication;
Edit, copy, find, replace of files operation;
X, Y, U, V four axes CNC control, X, Y, U, V four axes linage;
Angle cutting, up and down different shape cutting;
One cut and multi-paths cut capacity;
Feed speed of wire is controlled by CNC system;
Automatic wire tension keeping system.

節約電能： 運用電源循環再利用技術，大幅度提高了電源的利用率，可節省電源40%以上；
提高生產率： 采用了先進的電源技術，實現了高速加工，最大生產率可達160mm2；
Power-saving: adopt power recycle system, increase use rate of power source rapidly, save more than 40% power;
Increase efficiency: adopt advance HF power to realized high speed machining, Max. cut speed could be 160mm2;

機床其他部件
MACHINE STRUCTURE

走絲系統
Wire feeding system

走絲系統 采用進口指點導軌自動預緊對電機體絲進行恒張力控制。

電機絲導向器 采用金剛石導向器，大大減少因導向器磨損而影響加工精度。

機間工作液 供給部分采用上、下同軸噴流結構，改善排屑，提高加工效率。

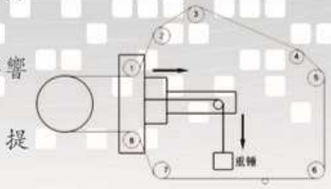

Wire feed system imported linear guideway with automatic pre tighten function to keep constant tension of wire.

Diamond guide high quality diamond guide to reduce its wear and increase accuracy.

Working solution up and down separated flushing, better chip removal . capacity, faster cutting speed.

水處理系統
Working solution system

工作液的控制 通過國外優質高壓水泵控制使加工時的工作液保持恒定，水壓穩定，高壓時可達揚程37m。

工作液壓力 手動控制設定高壓及低壓。

Control of working solution controlled by imported high quality pump to make sureconstant pressure and stability, Max. pumping head 37m.

Pressure control manual adjust high and low pressure.

錐度系統（發明專利設計）
Taper system(invention patent)

傳動系統 采用P3級滚珠絲杠，P級直綫導軌，電機 直接式控制，拋弃傳統錐度系統，使錐度更穩定，剛性更强。

貼面系統 Z軸采用貼面加工方式，徹底改變表面加工質量，高穩定性。

高穩定性 全新的專利設計解决了行業中一直存在的錐度低穩定性。

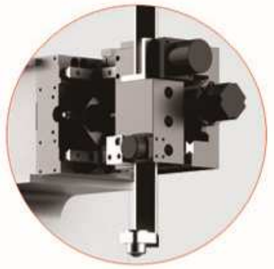

Transmission P3 grade ball screw, P grade linear guideway, direct motorized control, Kingred abandoned traditional aper system to achieve better rigidity.

Facing machining Z axis can approach workpiece very closely thoroughly to improve surf-ace finish and machining stability.

High stability Kingred' s patented design solved problem of lowstability of traditional taper system, to get better performance of angle cutting.

機床參數
MACHINE MAIN SPECIFICATIONS

機床型號	Item	單位	KD400CL	KD400GL	KD400ZL	KD500CL	KD500GL	KD500ZL	KD630CL	KD630GL	KD630ZL	KD800CL	KD800GL	KD400H	KD500H
工作臺行程 xyz	Worktable travel	mm	320*400*300	320*400*300	320*400*300	400*500*300	400*500*300	400*500*300	500*630*300	500*630*300	500*630*300	630*800*500	630*800*300	320*400*250	400*500*250
工作臺尺寸	Worktable dimension	mm	435*650	435*650	435*650	520*800	520*800	520*800	660*880	660*880	660*880	780*1010	780*1010	435*650	520*800
最大切割錐度	Max. workpiece thickness	mm	±3°	±15°	±15°	±3°	±15°	±15°	±3°	±15°	±15°	±3°	±15°	±3°	±3°
加工精度 八角	Machining accuracy Star anise	mm	±0.005	±0.005	±0.003	±0.005	±0.005	±0.003	±0.005	±0.005	±0.003	±0.006	±0.006	±0.006	±0.006
加工精度 錐度	Machining accuracy Taper	mm	±0.015	±0.015	±0.015	±0.015	±0.015	±0.015	±0.015	±0.015	±0.015	±0.015	±0.015	±0.015	±0.015
最大切割速度	Max.maching speed	mm²/min	180	180	180	180	180	180	180	180	180	180	180	180	180
最高光潔度	The highest finish	um	≤1.0	≤1.0	≤1.0	≤1.0	≤1.0	≤1.0	≤1.0	≤1.0	≤1.0	≤1.0	≤1.0	≤1.0	≤1.0
鉬絲範圍	Molybdenum wire range	mm	0.12~0.2	0.12~0.2	0.12~0.2	0.12~0.2	0.12~0.2	0.12~0.2	0.12~0.2	0.12~0.2	0.12~0.2	0.12~0.2	0.12~0.2	0.12~0.2	0.12~0.2
最大加工電流	Max.maching current	A	7	7	7	7	7	7	7	7	7	7	7	7	7
額定功率	Rate power	Kw	<2	<2	<2	<2	<2	<2	<2	<2	<2	<2	<2	<2	<2
電壓	Voltage	V/Hz	380/500	380/500	380/500	380/500	380/500	380/500	380/500	380/500	380/500	380/500	380/500	380/500	380/500
最大承載重量	Maximum load capacity	kg	400	400	400	600	600	600	800	800	800	900	900	400	600
機床重量	Weight of machine	kg	2600	2600	2600	3000	3000	3000	4000	4000	4000	5000	5000	2600	3000
機床外形尺寸	Machine dimensions	mm	1610*1400*2000	1610*1400*2000	1900*1800*2000	1810*1600*2000	1810*1600*2000	2100*2000*2000	2010*1800*2000	2010*1800*2000	2300*2200*2000	1840*2110*2700	1840*2110*2200	1610*1400*2000	1810*1600*2000
包裝尺寸	Package Size	mm	1850*1600*2200	1850*1600*2200	2100*2000*2200	2100*1800*2200	2100*1800*2200	2300*2200*2200	2200*2000*2200	2200*2000*2200	2500*2400*2200	2100*2300*2900	2100*2300*2300	1850*1600*2200	2100*1800*2200
加工液箱	**Item**	**單位**													
加工液	Dielectric fluid		專用工作液	一體	一體	專用工作液	一體	一體	專用工作液	一體	一體	專用工作液	專用工作液	專用工作液	專用工作液
加工液箱容量	Volume of container	L	60L			60L			60L			60L	60L	60L	60L
加工液過濾方式	Dielectric fluid filtration		可換式			可換式			可換式			可換式	可換式	可換式	可換式
加工液箱外形尺寸（L*W*H）	Dimensions of container（L*W*H）	mm	850*570*600			850*570*600			850*570*600			850*570*600	850*570*600	850*570*600	850*570*600
加工液箱包裝箱尺寸（L*W*H）	Container package dimensions（L*W*H）	mm	1000*700*680			1000*700*680			1000*700*680			1000*700*680	1000*700*680	1000*700*680	1000*700*680
加工液箱毛重/净重	Weight of container(Gross/Net)	kg	80/60			80/60			80/60			80/60	80/60	80/60	80/60
控制系統	**Item**	**單位**													
控制系統配置	Controller type		KDXP	一體	一體	KDXP	一體	一體	KDXP	一體	一體	KDXP	KDXP	KDXP	KDXP
控制系統外形尺寸（L*W*H）	Controller dimensions（L*W*H）	mm	600*800*1680			600*800*1680			600*800*1680			600*800*1680	600*800*1680	600*800*1680	600*800*1680
控制系統包裝箱尺寸（L*W*H）	Controller package dimensions（L*W*H）	mm	800*900*2000			800*900*2000			800*900*2000			800*900*2000	800*900*2000	800*900*2000	800*900*2000
控制系統毛重/净重	Weight of controller(Gross/Net)	kg	260/180			260/180			260/180			260/180	260/180	260/180	260/180

注：1.超厚材料加工時，請選用0.2mm的電極絲加工。
Choose Φ 0.2mm wire to cut large thickness workpiece.
2.最大加工速度160mm2/min,需另行購買附件和選用0.2mm電極絲加工。
It needs to buy extra accessories and use Φ0.2mm wire to get Max. cut speed 160mm2/min.
3.CL為進口伺服電機半閉環控制，H為精密型步進電機閉環控制。
CL is the type equipped with imported servo motor; H si the type equipped with stepper motor.
4.GL為進口伺服電機半閉環30度大錐度控制。
GL is imported servo motor semi-closed loop control with 30° taper cutting capacity.
5.ZL為進口直綫馬達全閉環30度大錐度控制。
ZL is imported linear motor closed loop control with 30° taper cutting capacity.

★ 為求產品之精進,制造者保有變更之權利,如與本目錄有所出入時,恕不另行通知
No special notification subject to technical improvement or upgrade

經濟型數控綫切割機床
CONVENTIONAL ECONOMICAL CNC WIRE CUT EDM

技術名稱	單位	KD703A	KD703B	KD703C
裝夾電機直徑 Diameter of electrode	mm	Φ0.2－Φ3.0（Φ5.0訂購）	Φ0.2－Φ3.0（Φ5.0訂購）	Φ0.2－Φ3.0（Φ5.0訂購）
工作臺尺寸 Worktable dimenstion	mm	320*440	320*440	320*460
X-Y行程 X－Y travel	mm	200*300	200*300	300*400
主軸頭行程 Stroke of spindle	mm	200	200	300
主軸伺服行程 Stroke of servo	mm	250	250	380
主軸最大調整速度 Max. speed of spindle	mm/min	120	120	120
旋轉頭（C軸）轉速 Axis of rotation	rpm	60	60	60
導向器與工作臺面最大距離 Max distance from guide to worktable	mm	280	280	280
工作臺面高度 Height of worktable	mm	920	920	920
數顯方式 Display		X,Y軸數顯	X,Y軸數顯	X,Y軸數顯
最大加工電流 Max. machining current	A	30	30	30
輸入最大功率 Max. input consumption	KW	3	3	3
電源輸入方式 Power	V/Hz	380、50Hz	380、50Hz	380、50Hz
工作液桶容量 Filtering of working liquid	L	25	25	25
工作液過濾方式 The working fluid filtering		間隙式	淺隙式	淺隙式
最大工作液壓力 Max. pressure of working liquid	Mpa	6－10	6－10	6－10
主機外形尺寸 Dimension	mm	800*1100*1700	800*1100*1700	800*1100*1700
整機重量 Weight	Kg	600	600	600

★爲求產品之精進,制造者保有變更之權利,如與本目錄有所出入時,恕不另行通知
No special notification subject to technical improvement or upgrade

技術參數 TECHNICAL SPECIFICATION

Parameters/specification	DK7725	DK7732	DK7740	DK7750	DK7763
工作臺面行程（mm） Worktable travel	250×320	320×400	400×500	500×630	630×800
工作臺面尺寸（mm） Worktable dimension	380×525	415×635	500×785	600×900	60×1100
加工深度（optional）（mm） Max. cut thickness	380/500	300/500	500	500	500/800
錐度（optional） Best surface finish	±3° /±30°	±3° /±30°	±3° /±30°	±3° /±30°	±3° /±30°
表面粗糙度（um） Taper	ra（once cutting）≦2.5	ra（once cutting） 2.5	ra（once cutting） 2.5	ra（once cutting） 2.5	ra（once cutting） 2.5
	ra(Multi-cutting) 1.5	ra(Multi-cutting) 1.5	ra(Multi-cutting) 1.5	ra(Multi-cutting) 1.5	ra(Multi-cutting) 1.5
精密度（mm） Best accuracy	≦0.015	≦0.015	≦0.015	≦0.015	≦0.015
螺絲和引導方式 Ball screw and transmission	Precision ball screw	Precision ball screw	Precision ball screw	Precision ball screw	Precision ball screw
	Precision stell liated/linear guideway	Precision stell liated/linear guideway	Precision stell liated/linear guideway	Precision stell liated/linear guideway	Precision stell liated/linear guideway
最大載量（kg） Max. load	300	400	500	800	1000
機床重量（kg） Weight	1600	1700	2000	2300	4500

電火花細孔放電加工機
SMALL HOLE EDM

關于機器的注意事項

1.機床引進的準備工作

綫切割放電加工機時經過精心制造的精度機床，爲發揮機床本來的性能，希望充分考慮主機的設置環境。請在事前查明主機的防治基礎、搬運路綫、環境濕度、粉塵狀況、電氣容量并考慮好相關的措施，以保證引進後的順利開動。根據機床設置的需求，事前應向有關不猛提出申請（辦理有段危險物品的報告），由于地區不同，條列也不一樣，請務必確認。

2.關于電氣工程

在設置機床時，事先應根據主機，數據電源裝置、選配件組合，電氣總容量（KVA），然後考慮電源箱内的變壓器的動擊電流，并備好與設備容量相適應的空氣開關。電器總容量（KVA）=機床主機（主機+NC裝置）+附件（選配件）。綫切割放電加工機應采用獨立的空氣開關，清不要與其他機床共用一個空氣開關。使用漏電的空氣開關時，往往會因電源綫外混入的幹擾而使空氣開關產生誤動作，因此請選用合適的空氣開關。爲防止觸電，電磁障礙，請實施接電工程。接地工程特別是應以第三種工程（接地阻擾爲10Ω以下）來實施，希望每臺機床都要采用獨立的電綫（“—”點接地）。

3.關于電磁波障礙

放電加工通常會對電視機遇電子儀器等設備造成電磁波幹擾。此時若將加工室的電磁波與外界切斷（屏蔽室）就會有效的清楚幹擾。屏蔽室的工程内容，應根據幹擾的狀況，工程的環境以及加工室的大小等方面予以施工，因此請與專門從事這一行業的人員接洽。當愛屏蔽室防止綫切割機，施工時請注意一下幾點：

（1）請在屏蔽室内放置地綫

（2）如果不能再屏蔽室設置電綫時，請將綫切割機的電綫設置在屏蔽室的地綫端子（穿透的螺栓）上。在受幹擾的機器，僅限于電視機，收音機及通信設備情況下，改變一下這些機器的天綫，往往就能消除幹擾。

4.關于高頻波形的畸變

當店員的高頻波形發生畸變時，盡管電壓没有變動，有時也會給裝置的動作帶來一定的影響。此時需要避開產生高頻設備或者利用綫性濾波器等來處理。

5.關于空調

加工機床能用的環境爲10-35℃、濕度爲40-75%，這是可能使用的範圍，考慮到精加工和操作和的環境，注意一下的設置：

（1）用放電加工進行精加工時，應在加工室内設置空調器，使室内盡量保持恒温。

（2）在24小時内若温度變化超過3℃或者在1小時内温度變化超過1℃時，就有可能使加工精度產生影響，因此請予以注意。

（3）室温設定在10-25℃的範圍内。

（4）就放電加工機與NC裝置而言，没有對濕度特別敏感的部件。但是考慮到操作者的工作環境一般報紙在50%左右爲宜。

（5）即使在没有空調設備的場所液避免目光的直射或吹風，設法不要讓機床的周圍環境濕度收到急劇的改變。

（6）關于換氣，不祇是放電加工機床，一般的切削機床在進行加工時，液都會產生一些氣體（烟霧），考慮到操作者共走環境，應采取換氣措施，在空調系列中，也有變控制温度、邊換氣的機型。請配置與工廠生產環境相適應的裝置。

（7）請把機床設置在没有酸等化學腐蝕性氣體、烟霧以及粉塵少的場所。特別是在磨床的附近，請注意磨料及磨削液的武器會給機床的滑動部位帶來很壞的影響。

6.關于接觸地面的震動

地面允許震動的推薦值：震動程度爲40dB（分貝）以下。爲了保持加工精度，當預定的場所地面震動大時，請采取以下的處理方法：

（1）采取仿振的基礎工程

（2）移動震動的小的場所

7.關于機床產生的熱量

每臺機床會產生熱量，電源的冷却風扇把熱氣直接排除到外面，有可能減少空調設備的容量。因此在準備空調設備時，請予以充分考慮。

PREPARING FOR INSTALLATION

PERARING FOR SET-UP

Before install the Wire Cut EDM ,please consider the location environment such as foundation, delivery route,status of particulate,powersupply,etc.Toensure the machine can be commisioned .On the other hand ,different region have different situation,please confirmed the site situation before set up the machines.

EARTH-LEAKAGE BREAKERSELECTION

Before set up the machine,it needs to calculate the total power consumption and selecte a suitabal amperes earth-leakage breaker.the total power consumption is the combination of machine unit, NC unit and accessories.

Wire Cut EDMs must connect to individual breaker, it cannot share with other machines.Please be aware that install a highly sensitive earth-leakage breaker may operate erroneously at time.Therefore, it is recommended install a suitabal breaker.The machine must be grounded to aviod damage resuting from electromagnectic interference or electrical leakage The grouding itself should be Type 3(grounding resistance of 10Ω max.)as specified in the electrical installation standards and should be carried out independently of the grounding of any other piece of machinery (one point earth).

ELECTROMAGNETIC INTERFERENCE

If a Wire Cut EDM is found to cause interference with visual dispay or communications system, it should be installed in ashieded room,the situation of the shielded room depengs in satus of following when installing Wire Cut EDMs in a shielded room.

1.Gronding is required in the shielded room;

2.if ti is impossibal to provide aground terminal inside the room, the gounding cable should be connected to a ground terminal outside of the room via a bolt in the wall;

HIGH FREQENCY DISTORTION

High frequency associated a power supply may sometimes affect the operation of Wire Cut EDM,even though no voltage flutuationis experienced.To prevent such circumstances,please aviod operating the EDM near high-frequency equipment or installa line filter in the electrical wiring of the system .

WORKING TEMPEARATURE IN ROOM

The operaing temperature range of wireCut EDM is 10-35° C,relative humidity is 40-75%.To consider the environmentfor precision cutting and operators,please ensure the following points;

1.The room must installed air conditioner to keep the room temperature constant ;

2.Temperature changed more than 3° C in 24 hours or 1° C;

3.Remmended room temperature rang from 20-25° C;

4.The optimum humidity is around 50%;

5.Do not expose the machine to air flowing from air condtioning vents or direct sunlight;

6.Some mist will generat during machining, so the machine must be installed in a free air flow environment;

7.Machine musebe installed in a non-corrosive, without mist and paniculate-free envirionment,especially near the gindingmachines.It would affect the performance of the Wire Cut EDM signficantly if machining mechanisms or drives such as ballscrews and slide ways became contaminated.

FLOOR VIBRATION

To ensure the machining accuracy, the allowedvibration level is below 40dB.When the vibrition level is over the permittedlevel,please use the following methods;

1.Use a anti-vibrition foundation;

2.Re-locate the machine.

HEAT GENERATED BYMACHINE

Each machine will generated heat, the cooling device of dieletric fluid generates.Please consider these factors when installing the air -conditioning system for the room.

形象與戰略

IMAGE AND STRATEGY

專業專注 全心服務

PROFESSIONAL SERVICE

一、免費負責調試。

二、產品實行三包服務一年，機床終身維修。

三、備件長期有償優惠供應。

四、客户可派2-3名人員到公司進行免費操作培訓及簡單的維修培訓，公司提供午餐一頓，差旅費自備。

五、售後服務：

1.設備出現故障後，用户可以來電聯系解決，若無法通過電話解決，公司在有服務的地區24小時內到達現場，在無服務點的地區72小時內到達現場，爲客户排除故障。

2.三包期內，除認爲因素損壞外，公司免費提供維修服務，易損件、耗材費由客户承擔。

3.一年後的服務需收取維修費，零件費及路費。

售後服務
400-0990619

免費調試
FreeDebugging

終身維修Lifetime Maintenance

24小時服務
24-Hour Service

零件優惠供應