MAC-TECH

SINCE 1984

Finishing!

Why Mac-Tech Finishing?

ENGINEERING EXCELLENCE in each machine during every step from inception, through design and build, utilizing parts and components used worldwide by machinery builders that are accessible and available overnight if needed.

INNOVATION FIRST. When our customers expressed concerns about leveling, we introduced a separated 4 PILLAR SYNCRONIZED balance system to keep the machine, conveyor and media perfectly balanced to guarantee uniform finish and better part finish!

BUILT TO LAST. When our customers wanted a longer lasting machine, we designed features to keep the motors and gears out of the “danger zone” and solid stainless steel interiors on wet machines to keep out rusting and deterioration. As a point of emphasis we standardized stainless steel construction in any area moisture comes in contact with our machines.

SMART DESIGN. When our customers asked for longer wear and tear on the conveyor belts, we designed a patented conveyor belt tracking system to ensure our conveyors stay straight and true. We also simplified conveyor extraction from our machines so when time does come to replace a belt, rest assure it will be done fast and efficient!

RELENTLESS OBSESSION. Our mission to our customers: Provide a world class technical center to determine what machine accomplishes the finish you seek. Use global media suppliers to make sure the correct abrasives are used. Employ factory trained technicians to serve you when needed! 24/7/24. That’s MAC-TECH FINISHING!

Table of Contents

Intro 2

Table of Contents 3

SB Series:

SB1300K 4
SB1300KG 6

SBG Series: Two-Side-One-Pass Deburring

SBG1000 8

SP Series: Abrasive Cylinder Deburring

SP1000 10

SD Series: Disk Brush Deburring

SD-H 12
SD300-WJS + 3D 14
SD300-JS+D 16

SG Series: Abrasive Belt Deburring

SG630-JS 18
SG630-WJS 20
SG1030-JS 22
SG1030-WJS 24
SG1300-WJS 26
SG2500-2 28
SG3800-2 29

Custom Machines 30

Our Mission 31

KEY

B = Bottom Deburring
D = Disk Brush
G = Abrasive Belt
K = Barrel Brush
P = Abrasive Cylinder
JS = Dry Operation

SB SERIES

SB1300K Slag Removal & Top/Bottom Deburring Machine

SB1300K

Slag Removal & Top/Bottom Deburring Machine

The Jonsen SB1300K Slag Removal & Top/Bottom Deburring Edge Rounding Machine is equipped with slag removal and top/bottom deburring belts which work efficiently on edges, holes and sides. Our highly efficient finishing systems are built to withstand your everyday deburring needs.
If it's burr knockdown, edge rounding, slag removal, polishing or decorative finishing, mild steel, stainless steel, aluminum or cast iron, JONSEN is ready to perform!

Product Features

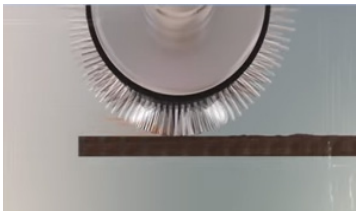

Slag removal

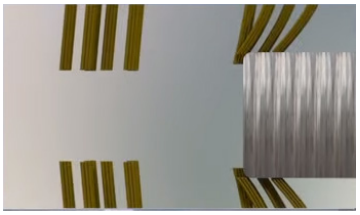

Top/Bottom deburring

Technical Data

Max. working width	51"
Min working length	20"
Working thickness	0.05-5.5"
Feed speed	3.2-29.5 ft/min
Deburring belt compensation height	1.5"
Table height	32"
Total power	40kw
Dimensions	7.9 x 7.6 x 7.25 ft
Weight	3 Tons

Applications

Burr knockdown
Edge rounding
Slag removal
Polishing
Decorative finishing
Mild steel
Stainless steel
Aluminum
Cast Iron

SB SERIES

SB1300KG Deburring, Grinding and Edge Rounding Machine

SB1300KG Deburring, Grinding, and Edge Rounding Machine

SB1300KG

Deburring, Grinding, and Edge Rounding Machine

The Jonsen SB1300KG Deburring, Grinding, and Edge Rounding Machine is equipped with slag removal, grinding, and top deburring belts which work efficiently on edges, holes and sides. Our highly efficient finishing systems are built to withstand your everyday deburring needs. If it's burr knockdown, edge rounding, slag removal, polishing or decorative finishing, mild steel, stainless steel, aluminum or cast iron JONSEN is ready to perform!

Product Features

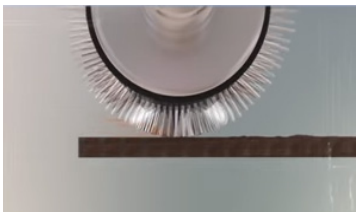

Slag removal

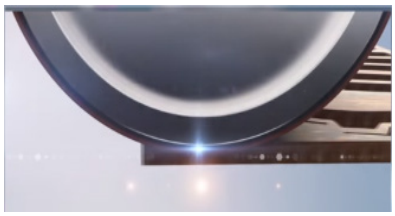

Grinding Belt

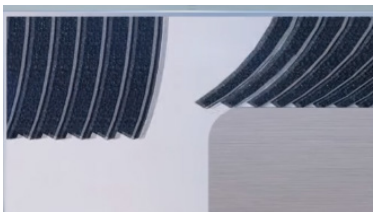

Top Deburring

Technical Data

Max. working width	52"
Working thickness	0.05-5.5"
Min. working length	20"
Feed speed	3.2-29.5 ft/min
Table height	37"
Total power	45 kw
Dimensions	8.5 x 6.6 x 6.6 ft
Weight	3 Tons

Applications

Burr knockdown
Edge/hole rounding
Slag removal
Polishing
Decorative finishing
Mild steel
Stainless steel
Aluminum
Cast Iron

SBG SERIES

SBG1000 Automatic Two-Side-One-Pass Deburring Machine

SBG 1000

Automatic Two-Side Deburring Machine

The SBG 1000 is a two-side-one-pass deburring & edge rounding machine. It utilizes two deburring belts for processing all interior and exterior contours.The work piece is carried by an inlet conveyer belt, then ground by an abrasive belt. Most of the vertical burrs and slag are removed or knocked by abrasive belt grinding. At the same time, the burrs on the back of the work piece are removed by the bottom deburring belt. The top of the work piece is then processed by the top deburring belt at machine outlet.The SBG1000 gives excellent results from precision sheet metal parts deburring to slag grinding after laser cutting or plasma cutting.

Product Features

Mitsubishi electrical control

Top deburring head

Bottom deburring

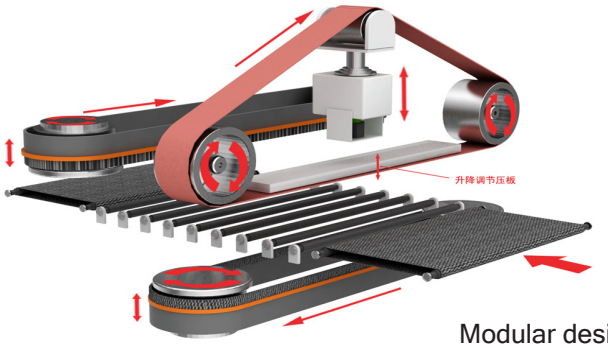

Modular design

PLC touch screen
(Mitsubishi)

Technical Data

Max. working width	39.4”
Max. working thickness	5.5”
Min. working length	5.5”
Conveyor speed	6.5-29.5 ft/min (Variable speed)
Abrasive belt compensation height	1.5”
Total power consumption	17.21 kw
Feeding table height	32”
Dimensions	6.2 x 8 x 6.25 ft

Applications

Deburring sheet metal
Slag grinding after laser/plasma cutting

SP SERIES

SP1000 Planetary Type Metal Deburring Machine

SP1000

Planetary Type Metal Deburring Machine

The SP1000 is equipped with six abrasive barrels on the head; each spins itself while the whole head rotates in the meantime. It can deburr on all edges and deeply in holes on plate by the effects of abrasive media in high speed centrifugal grinding, cutting, scraping and filing. Burrs on interior and exterior contours can all be removed, but the precise dimensions on plate will be kept.

Product Features

- Designed with open chamber for parts width up to 2000mm (78.7").

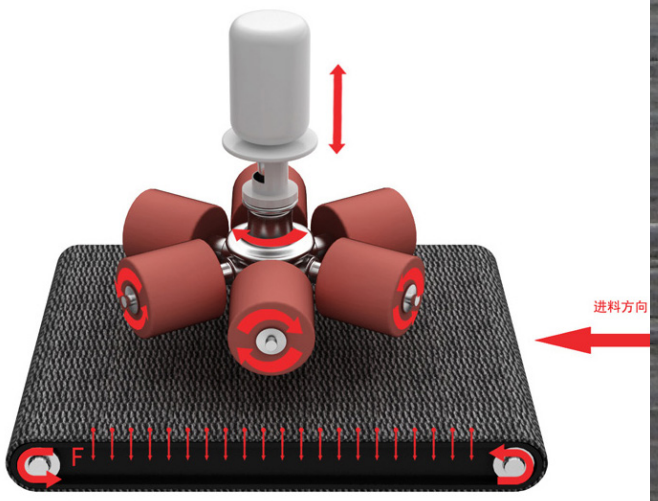

- Vacuum feeding or optional rotation feeding system
- Six abrasive barrels on head

Technical Data

No. of planetary assembly	1 pc
Speed of planetary assembly	0-9.6r/min
No. of abrasive barrels	6
Speed of spindles	0-1575r/min
Max. working width	79”
Min.working size	1.5 x 1.5”
Working thickness	0.05-5.5”
Feed speed	1.6-16.4 ft/min
Abrasive barrel	12 x 11”
Total power	12kw
Machine size:	7 x 6 x 7.2 ft

Applications

Deburring on flat parts

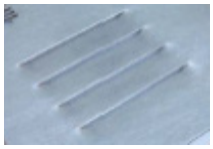

Deburring on 3-dimensional parts

SD SERIES

Badger(SD-H): Abrasive Head + Disk Brush Deburring Machine

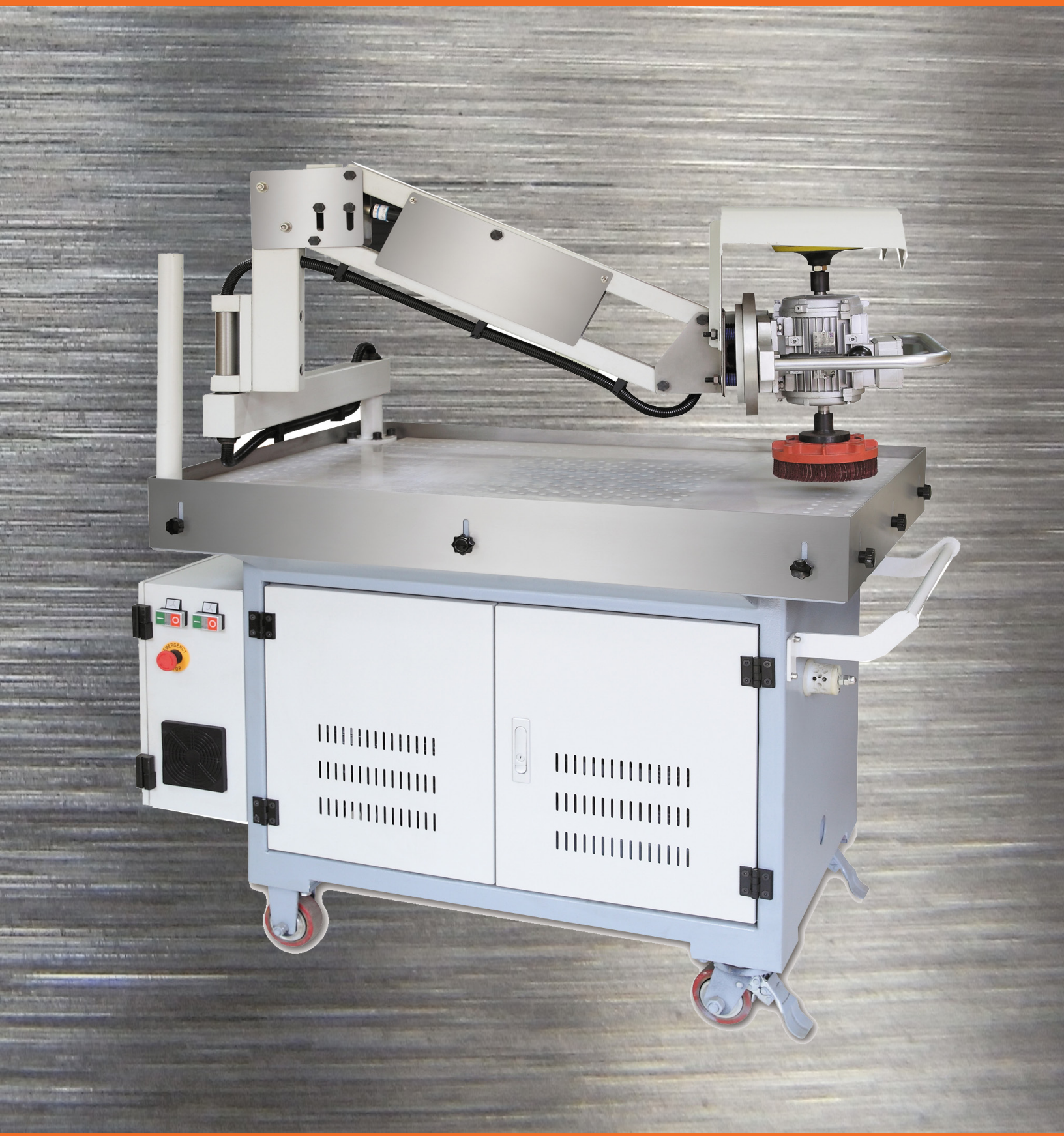

Badger(SD-H):Abrasive Head + Disk Brush Deburring Machine

SD-H Badger

Abrasive Head + Disk Brush Deburring Machine

The BADGER (SD-H) Abrasive Head + Disk Brush deburring machine is THE solution when it comes to deburring small parts. Up until now, in order to deburr smaller metal parts you either had to do it manually with power tools or with expensive through-feed machines.

The BADGER changes all of that, offering a quick-change dual finishing/grinding head, a 360° swinging arm, and a one-of-a-kind custom vacuum table to ensure that the parts don't move during deburring–all for an extremely low investment price.

Product Features

- High quality deburring in a semi automatic environment.
- Air cushioned deburring head for effective pressure control.
- Vacuum table for fixture free mounting of components.
- Highly effective down draft dust collection.
- Instant changeover from rough to fine grit on the same head.
- Two second head replacement for maximum production.

Abrasive Head

Disk Brush

Technical Data

Vacuum table size	13.5 x 12”
Cantilever arm working range	59” X 360°
Max. parts size on table	55 x 32”
Max. parts size outside table	59 x 59”
Working thickness	0.05-7.9”
Deburring head power	0.75kw
Qty of deburring head	2
Power of dust collection fan	0.045 kw x 2
Total power	4.05kw
Machine size	4.7 x 2.7 x 4.9 ft

Applications

Stamping parts
Auto parts
Precision machinery parts
3D parts
Small holes
Edge/hole rounding
Polishing

SD SERIES

SD300-WJS+3D Jonsen Disk Brush System Deburring Machine

SD300-WJS+3D Jonsen Disk Brush System Deburring Machine

SD300-WJS+3D

Disk Brush System Deburring Machine

The SD300-WJS+3D is a combination wet operation machine with an abrasive belt and rotation type disk brush system. The SD300-WJS+3D is suitable for heavy grinding and efficient disk brush type deburring. The four heads on the machine can run together or separately for deburring or edge rounding.

Product Features

Rotation disk brush system

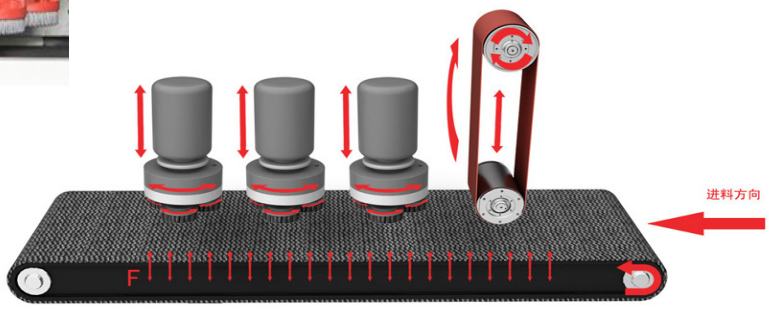

Combination abrasive belt and rotation disk brush system

Technical Data

Max.working width	12”
Working thickness	0.05-7.9”
Min.working length	1.2”
Feed table height	37”
Feed speed	1.6-16.4 ft/min
Total power	23kw
Machine size	16.2 x 4.75 x 7.05 ft
Abrasive belt size	75 x 12”
Disk brush speed	l480r/min
Weight	4.5 Tons

Applications

Heavy grinding
Precision punching parts
Valve plate
Fine blanking parts deburring
Edge/hole rounding
Uniform deburring of complicated contours

SD SERIES

SD300-JS+D: Metal Belt Grinding and Deburring Machine

SD300-JS+D

Metal Belt Grinding and Deburring Machine

The Jonsen SD300-JS+D metal grinding and deburring machine was made to achieve a uniform deburring of flat parts which also have complicated contours, curved surfaces and rounded edges.

Product Features

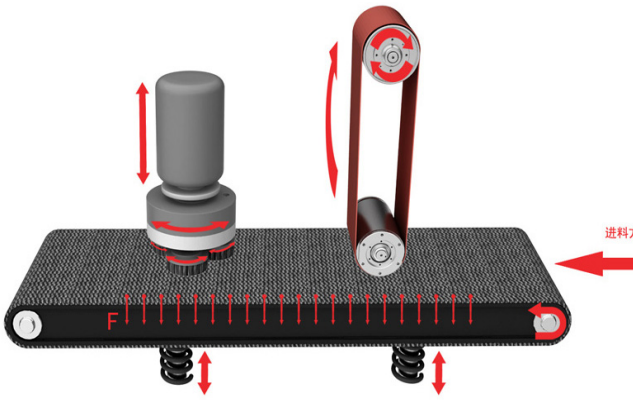

Grinding belt and disk brush for contoured or curved surfaces.

Inside view

Technical Data

Max Working Width:	12”
Working Thickness:	0.05 x 3.1”
Min. Working length:	16”
Feed Speed:	1.6-16.4 ft/min
Disk brush spindle:	1480rpm
Brush AssemblySpeed:	Variable speed
Abrasive Belt Size:	75” x 12”
Total Power:	15-18kw
Dimensions L x W x H:	6.3 x 3.9 x 6 ft
Weight:	1.5 Tons

Applications

Complicated contours
Curved surfaces
Edge rounding
Precision punching spare parts
Auto parts and precision mechanical parts
Valve plate

SG SERIES

SG630-JS: Wide Belt Grinder (Dry Operation)

SG630-JS

Dry Type Wide Belt Grinder

The Jonsen SG630-JS is the most widely used machine in the sheet metal processing industry. It is a wide belt, dry operation grinding machine. It has a 24” table and allows up to 4 heads. Its main functions are to carry out deburring operation of stamping sheet metal articles, perform surface napping and polishing, and create HL effect. This is an easy to operate machine.

Product Features

- Italian Digital thickness control system
- Patented pneumatic-controlled belt
- 4-pillar synchro lift system
- Precise heat-resistant conveyer belting
- Built-in engine
- Unique brush for cleaning conveyer belting

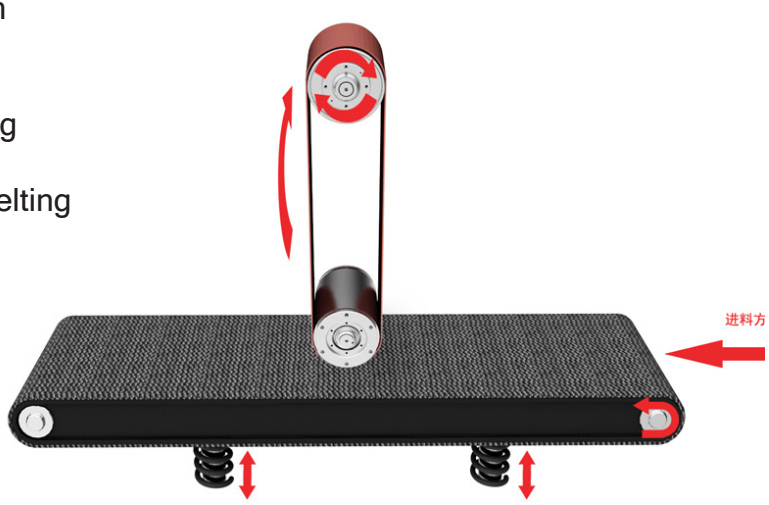

Wide grinding belt for strong descaling.

Technical Data

Max. Width:	24”
Min. Working Length:	10.6”
Thickness:	0.04-4.1”
Belt Size:	24.8 x 74.8”
Feed Rate:	7-36 ft/min
Total Power:	8.61 kW
Machine Dimensions:	4 x 5 x 6 ft
Machine Weight:	1.1 Tons

Applications

Deburring stamping sheet metal
Surface napping and polishing
Surface grinding
Scratch removal
Creates even surface for next steps, such as painting, bending, etc.

SG SERIES

SG630-WJS: Wide Belt Grinder (Wet Operation)

SG630-WJS

Wet Type Wide Belt Grinder

The Jonsen SG630-WJS is a wide belt, wet operation grinding machine. It has a 24” table and allows up to 4 grinding heads. Wet systems create a safe environment and clean surface finishing on aluminum, titanium, aluminum-magnesium alloy and stainless steel. The cooling system makes low heat on parts and belt life is prolonged in the meantime.

Product Features

- The patented outside lift system can be separated from grinding liquid.
- Prolonged life time and guaranteed accuracy
- Easy maintenance

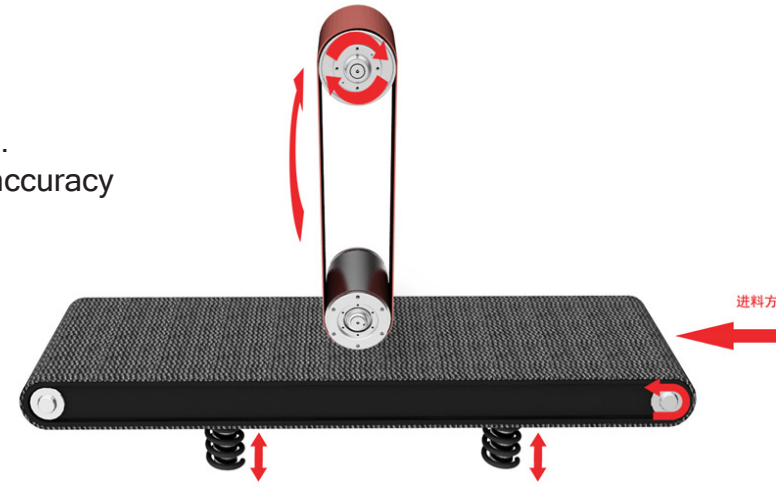

This compact design and modular technology can meet various operation needs.

Technical Data

Max. Width	24”
Min. Working Length	9.4”
Working Thickness	0.03-3.1”
Belt Size	24.8 x 74.8”
Feed Rate	7-36 ft/min
Total Power	8.61 kW
Machine Dimensions	6.7 x 5.9 x 6.9 ft
Machine Weight	1.5 Tons

Applications

Wet sanding
Strong descaling
Polishing platens
Stainless steel
Aluminum
Copper

SG SERIES

SG1030-JS: Wide Belt Grinder (Dry Operation)

SG1030-JS

Dry Type Wide Belt Grinder

The Jonsen SG1030-JS is dry operation, wide belt grinding machine with a 39” table and up to 4 grinding heads.

It is suitable for surface grinding, deburring and finishing material such as steel, stainless steel, and copper.

Product Features

- Italian Digital thickness control system
- Automatic belt offset
- 4-pillar synchro lift system
- Unique brush for cleaning conveyer belt
- Built-in engine
- Front lock on grinding head
- Automatic conveyor belt tracking device
  - No need to manual adjust belt tracking.
  - Easy operation

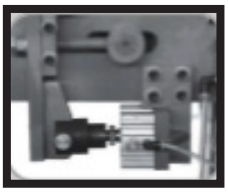

Automatic conveyor belt tracking device

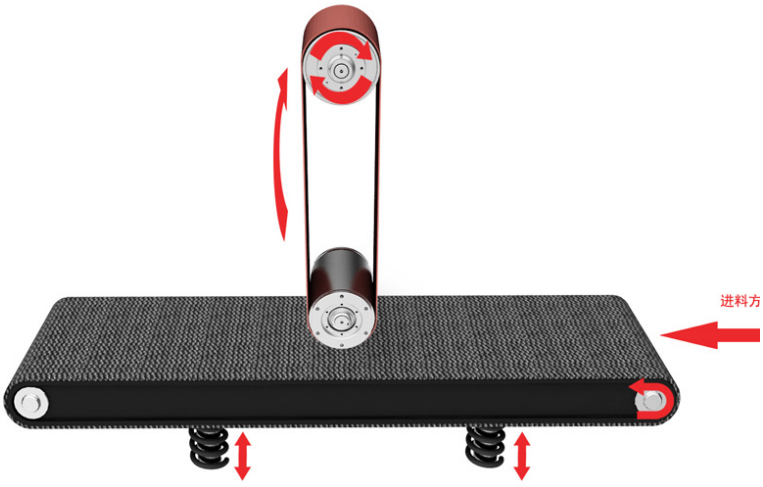

Wide grinding belt for surface grinding and finishing.

Technical Data

Max Width	39.4”
Min Working Length	9.4”
Thickness	0.03-3.2”
Belt Size	40.5” x 75”
Feed Rate	6.5–36 ft/min
Vacuum Air Flow	0.04 ft/min
Total Power	12.46 kw
Machine Dimensions	5.4 x 5.6 x 6 ft
Machine Weight	1.8 Tons

Applications

Surface grinding
Deburring
Finishing
Steel
Stainless steel

SG SERIES

SG1030-WJS: Wide Belt Grinder (Wet Operation)

SG1030-WJS

Wet Type Wide Belt Grinder

The Jonsen SG1030-WJS is a wide belt, wet operation grinding machine, with a 39” table and up to 4 heads.

Compared to the dry type grinding machine, this wet type grinder can produce a remarkable quality finish in processing metal articles such as aluminum, copper and alloy zinc products, which are easy to adhere to the sand belt and create a nice, clear finish. Furthermore, this type of grinder develops little heat during cold processing, which makes it possible to keep the shape of the work piece unchanged.

Product Features

- Italian digital thickness control system
- Patented pneumatic-controlled belt
- 4 pillar synchro lift system
- Automatic belt offset
- External lift system
- Precise filterig and circulating system
- Automatic conveyor belt cut-away device
- Front lock on grinding head

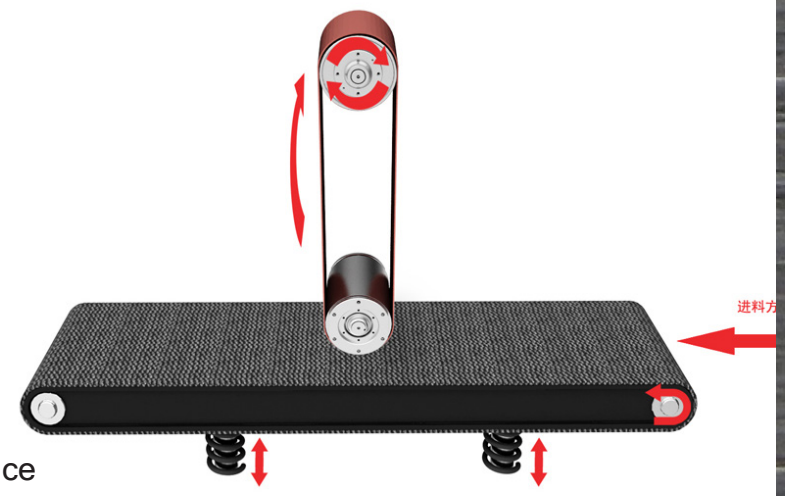

Wide grinding belt for surface grinding and finishing.

Technical Data

Maximum working width	39.4”
Feed speed	6.5-45 ft/min
Minimum working length	9.4”
Working thickness	0.03-2.8”
Total motor power	12.84kw
Size of belt	51.1” × 74.8”
Weight	2.8 Tons
Dimension	6.7 × 5.9 × 6.9 ft

Applications

Surface grinding
Deburring
Finishing
Alloy zinc
Aluminum
Copper

SG SERIES

SG1300-WJS: Wide Belt Grinder (Wet Operation)

SG1300-WJS

Wet Type Wide Belt Grinder

The JONSEN SG1300-WJS machine is available with up to 4 grinding heads. It has a 54” table. The roller table feed system enables it to grind sheet as thin as 0.5mm.The 86”-long belt makes it possible to prolong its replacement cycle and improve its efficiency.

It is ideally suited for stainless steel surface finishing.

Product Features

- Digital readout of machine opening
- Abrasive belt automatic tracking system
- Variable speed of contact roller
- Abrasive belt automatic compensation device
- Whole line DC control Roller table type feed
- Precision feed system (For wet system)

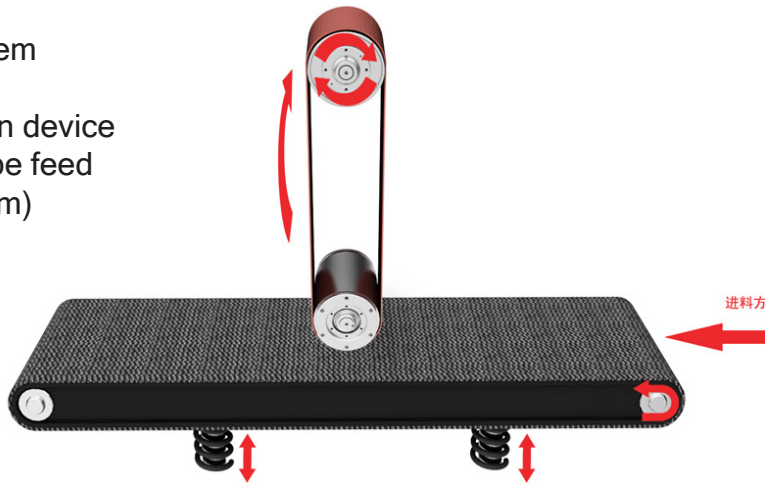

Technical Data

Maximum working width	50”
Feed Speed	6.5-45 ft/min
Minimum working length	11.8”
Working thickness	0.08-2.8”
Total motor power	55 kw
Size of belt	51.1× 86.6”
Weight	4 Tons
Dimension	9.2 × 8.8 × 7.4 ft

Applications

Surface finishing
Surface grinding
Deburring
Finishing
Stainless steel

SG2500-2: Double-Belted Grinding and Polishing Machine

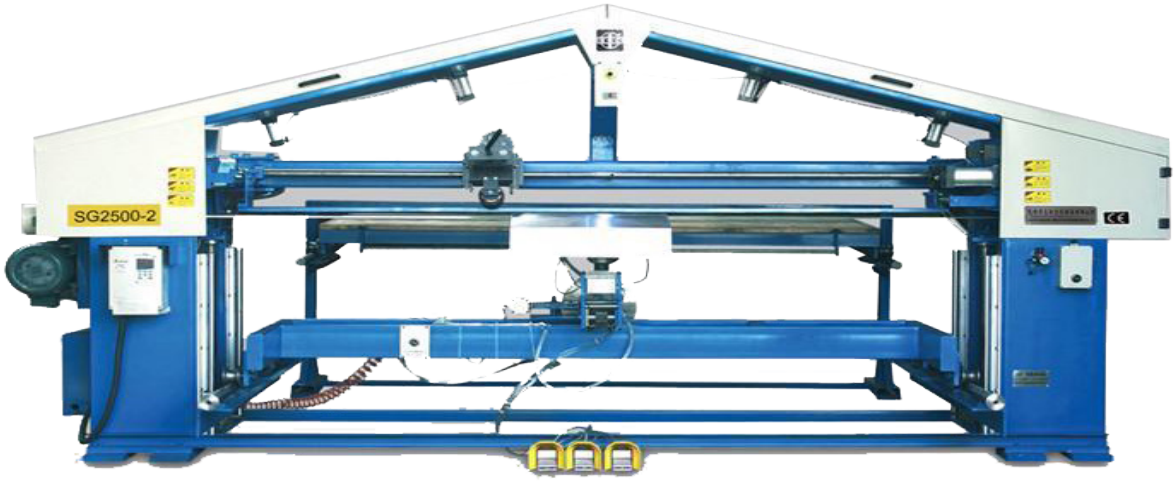

SG2500-2

Double-Belted Grinding and Polishing Machine (Dry Operation)

Jonsen's SG2500-2 Double-belted Grinding & Polishing Machine is a high-quality, low-cost solution for sheet metal finishing. The SG2500-2 is suited for surface finishing for flat plate and formed boxes. It is equipped with two belt grinding rollers to remove scratch marks and create an even surface. This high-speed machine is guaranteed to improve your production times in the finishing department.

Product Features

- 360 degree revolving work bench
- Speed regulation control of the belt
- Manual or mechanical operation is available
- Work benches are interconvertible
- Unique belt control method

Technical Data

• Max.working width: 59"
• Max. working length: 98.4"
• Min.working length: 24"
• Measurement of Belt: 4.7 x 354"
• Dual extraction capacity: 70,629 sq.ft/h
• Total power: 8.24kw
• Machine size: 15.75 x 13.8 x 7.7ft
• Weight: 4.5 Tons

Applications

Even deburring
Finishing
Great for enclosures
Boxes/doors/large pans
Special contours

SG3800-2: Double-Belted Grinding and Polishing Machine

SG3800-2

Double-Belted Grinding and Polishing Machine (Dry Operation)

The SG3800-2 is adopted with XYZ axil movements for grinding the surface of very large work pieces. Different grinding can be done of specific work pieces, especially cast iron and welded meal. The maximum working area can be up to 3800mm (149.6”) x 2000mm (78.7”) x 500mm (19.7). Max loading is 5 tons.

Product Features

- Digital control system
- Frequency control of spindle
- Precise roller linear guide pair
- Extra large working table
- PLC control
- Servo feed drives
- Alternative grinding wheel

Technical Data

Max.working width:	78.7”
Max. working length:	149.6”
Transverse velocity:	3.2-39 ft/min
Circumference of belt:	468.5”
Dual extraction capacity:	13123-16404 sq.ft./h
Total power:	11.74kw
Machine size:	19.7 x 19.7 x 6.6 ft
Weight:	7 Tons

Applications

Cast Iron
Welded meal
Even deburring
Finishing
Great for enclosures
Boxes/doors/large pans
Special contours

Custom Machines

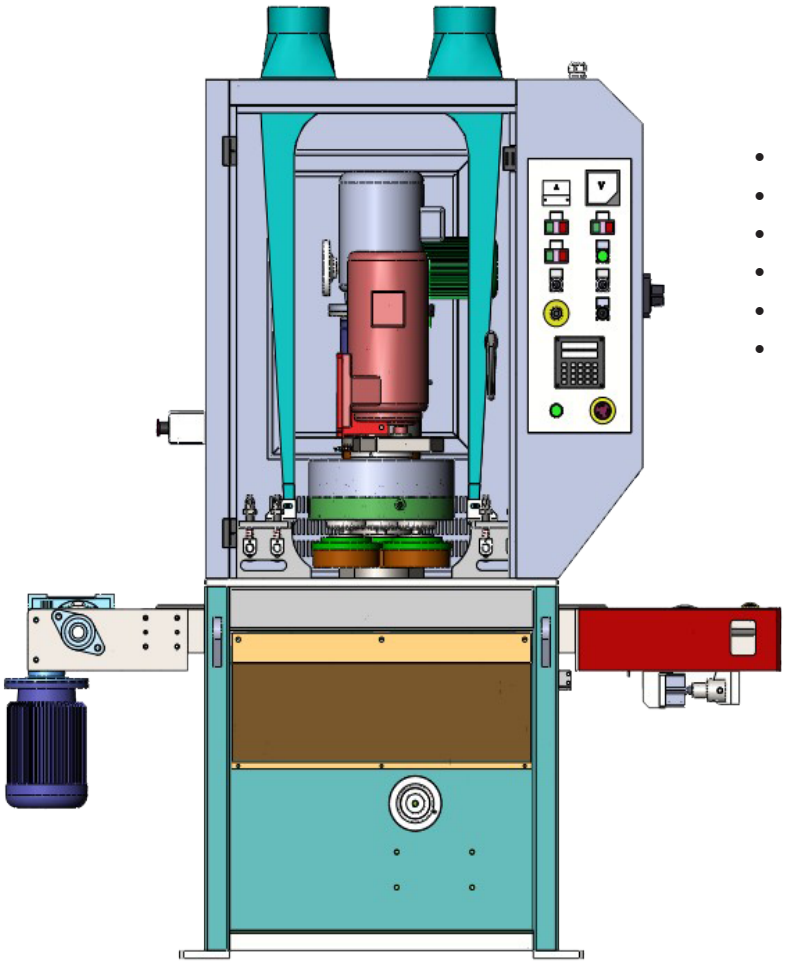

Custom Machines

- For ferrous and non-ferrous applications
- Single or double sided
- Multiple heads
- Multiple conveyor linked machines
- Specialized conveyors
- Engineered to your specifications

Wet Dust Collection

- When doing aluminum
- When mixing metal application
- Attachable to multiple machines
- Solid stainless steel construction
- Easy to clean and maintain

"A relentless obsession to serve our customer"

Thank you for considering Mac-Tech for your equipment needs.
Our firm is built on three simple principles:

Honest & Ethical Business

Every machine, new or used, is sold
with honest representation in all aspects.

Support our Employees

We believe that families come before business.

Serve the Customer

Our service organization is the best in the industry. We commit to a 24-hour response guarantee if your machine is down.

Since 1984, we have honored the customer, the employee,
and the value of doing good business throughout every work day.

This is the foundation of our sustainability.

*"There are only two ways to grow your business with customers:
new technology and superior after-sales support.
Mac-Tech offers you both. We want to be your maintenance partner!"*

Showroom: 3073 S Chase Ave, Building 27 Suite 650, Milwaukee WI 53207
Website: www.mac-tech.com Email: win@mac-tech.com
Toll Free: 888-622-9555 Local: 414-486-9700 Fax: 414-769-1522